NOTES:

1. ALL WIRING SHOULD CONFORM TO NEC, LOCAL, AND SITE CODES. USE ONLY COPPER (CU) CONDUCTORS.
2. MAIN DIRECT FEED (TOP)
   - TWO (2) Ilsco CU-AL COMPRESSION BOX LUGS
   - EACH ACCEPTING #6 TO 350 MCM WIRE
3. BRANCH BREAKERS (CB5x)
   - Square-D Power Pact Bx2-FRAME
   - COMPRESSION LUGS, ACCEPTING #14 TO 3/0 AWG
4. CU-AL GROUND COMPRESSION BOX LUG TERMINAL
   - ACCEPTING #14 TO 1/0 AWG WIRE
5. COPPER BUS BARS SUPPLIED FOR EASE OF BRANCH CIRCUIT BREAKER INSTALLATION.
6. REAR WALL-MOUNTING HOLES, SEE JE5368-51 FOR EXTERNAL MOUNTING DETAILS.
7. ALL CIRCUIT BREAKERS (MAIN & BRANCH) ARE LISTED TO STANDARD UL 489.
8. FOR FURTHER DETAILS, SEE DCP OPERATING INSTRUCTIONS (JA5117-01).

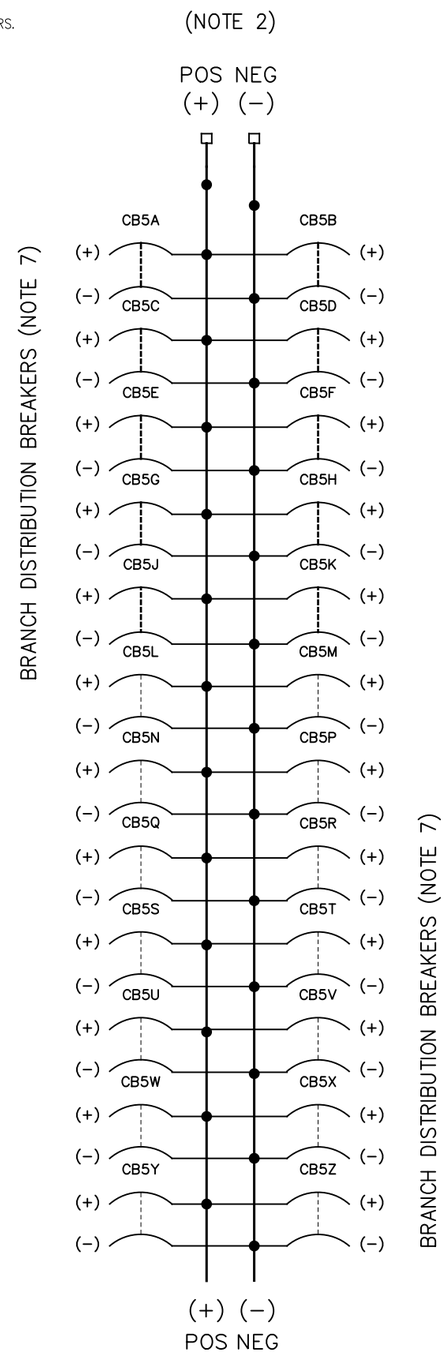

DC CONTROL PANEL SCHEMATIC

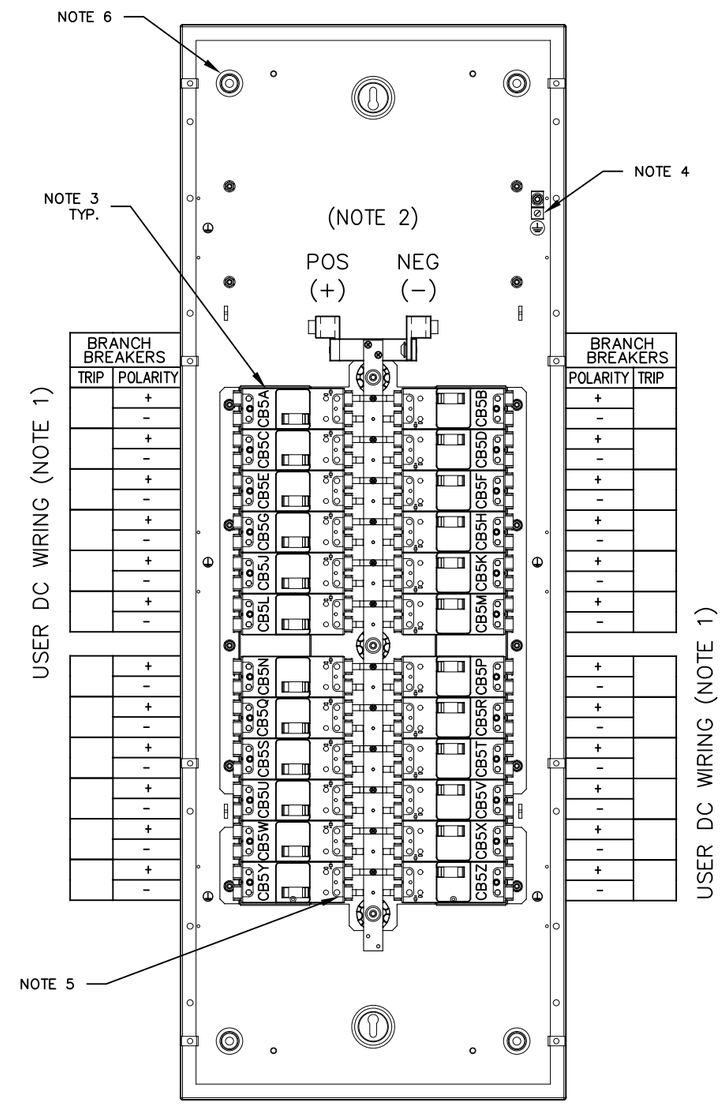

FRONT VIEW
(PANELS/DOOR REMOVED)

REV	DRN BY	CHK BY	APP BY	DATE
0	MCR	n/a	n/a	01.22.2024

DESCRIPTION
REV 0: INITIAL RELEASE

DRN BY	MCR	DATE 01.22.2024
CHK BY	n/a	DATE 01.22.2024
APP BY	n/a	DATE 01.22.2024

NOTICE
- UNCONTROLLED DOCUMENT
- CHANGES / DIGITAL SIGNATURES MAINTAINED BY MANUFACTURER

THIRD ANGLE PROJECTION

TITLE
DC CONTROL PANEL
INTERNAL COMPONENT LAYOUT DRAWING
STYLE-5013 MH56 – DIRECT DC LUGS

SIZE	SCALE	DWG No	REV	SHEET
B	NTS	JE5369-50	0	1 OF 1

FILENAME [JE5369-50.dwg/pdf]

http://www.atseries.net/PDFs/JE5369-50.pdf